UNIVERSITY OF SOUTH CAROLINA

ITEC 493: IT Security for Managers

Basic Cryptography

Ali Mazloum
Integrated Information Technology Department
College of Engineering and Computing
University of South Carolina

Fall 2025

Asymmetric Cryptographic Algorithms

- Weakness of symmetric algorithms: distributing and maintaining a secure single key among multiple users distributed geographically
- Asymmetric cryptographic algorithms (public-key cryptography)
  - Solves the problem “how do I communicate a password securely?”
  - Uses two keys instead of only one
- Keys are mathematically related:
  - Public key: known to everyone and can be freely distributed
  - Private key: known only to the individual to whom it belongs
- Asymmetric key algorithms are computationally expensive

Asymmetric Cryptographic Algorithms

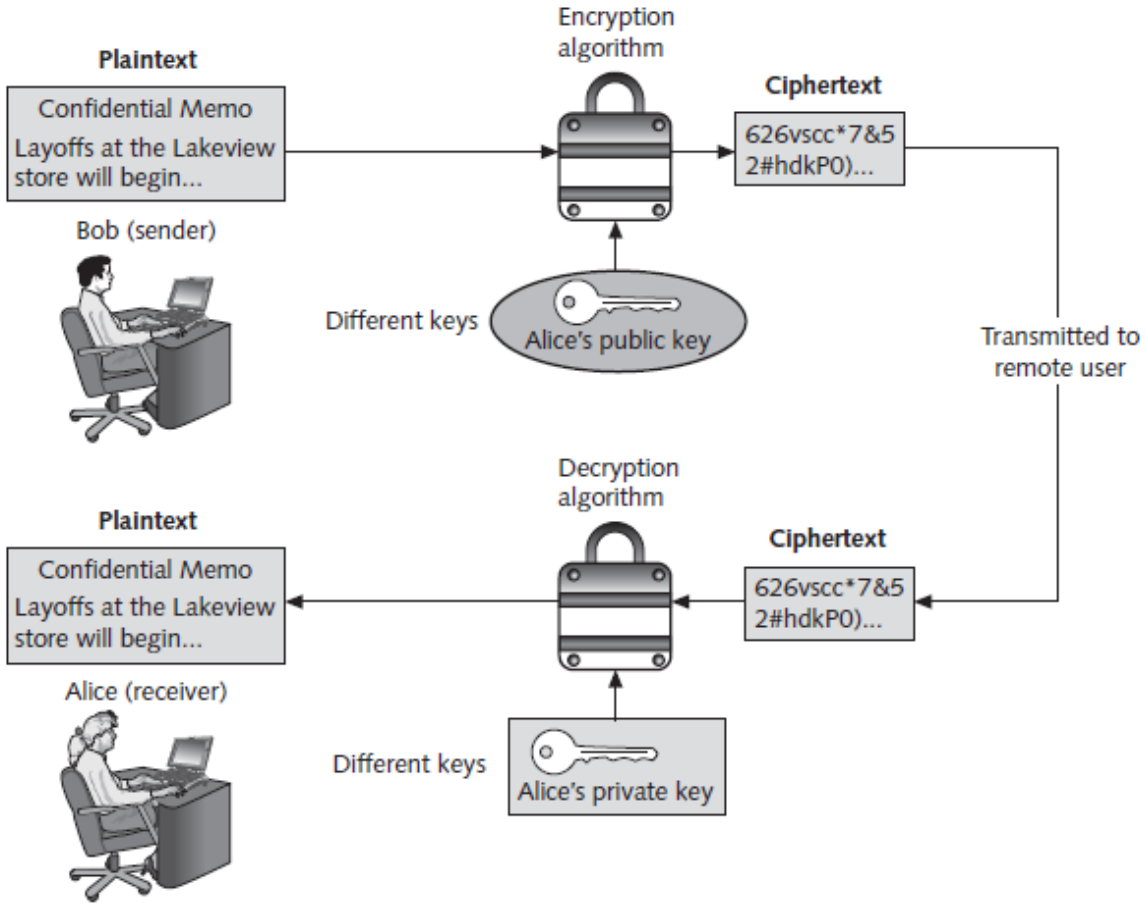

Asymmetric Cryptographic Algorithms

- Important principles
  - Key pairs – Requires pair of keys
  - Public key – Do not need to be protected
  - Private key – Must be kept confidential
  - Both directions - Document encrypted with public key can be decrypted with corresponding private key (and document encrypted with private key can be decrypted with public key)

Digital Signature

- Cryptographic technique analogous to hand-written signatures:
  - sender (Bob) digitally signs document, establishing he is document owner/creator.
  - verifiable, nonforgeable: recipient (Alice) can prove to someone that Bob, and no one else (including Alice), must have signed document

Digital Signature

- Approach 1: Bob signs m by encrypting with his private key, creating "signed" message

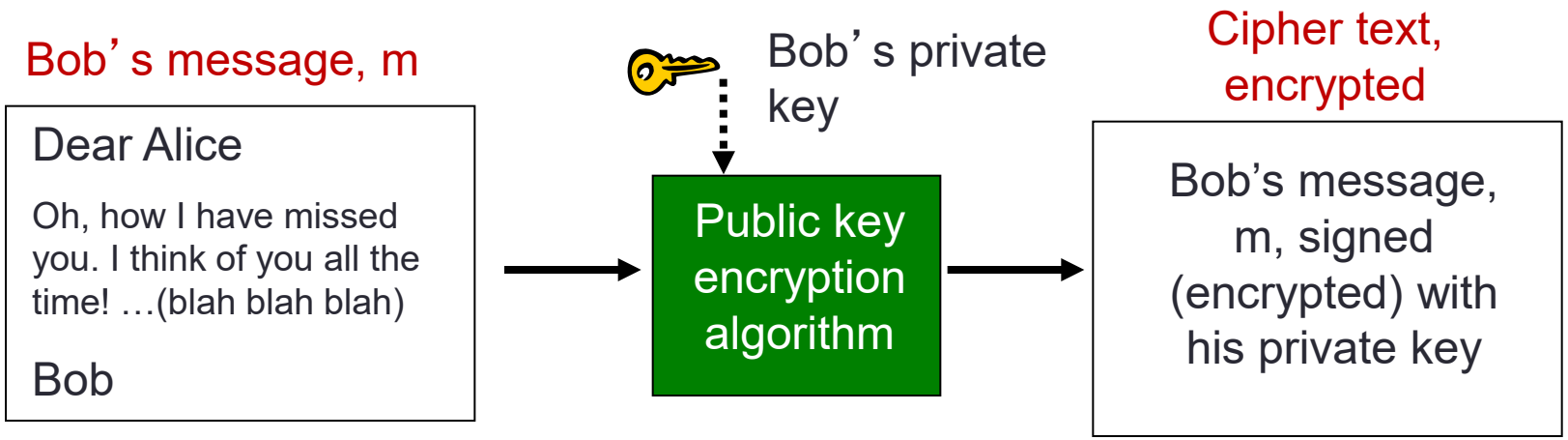

Digital Signature

- Approach 2: use a hash algorithm to sign the message

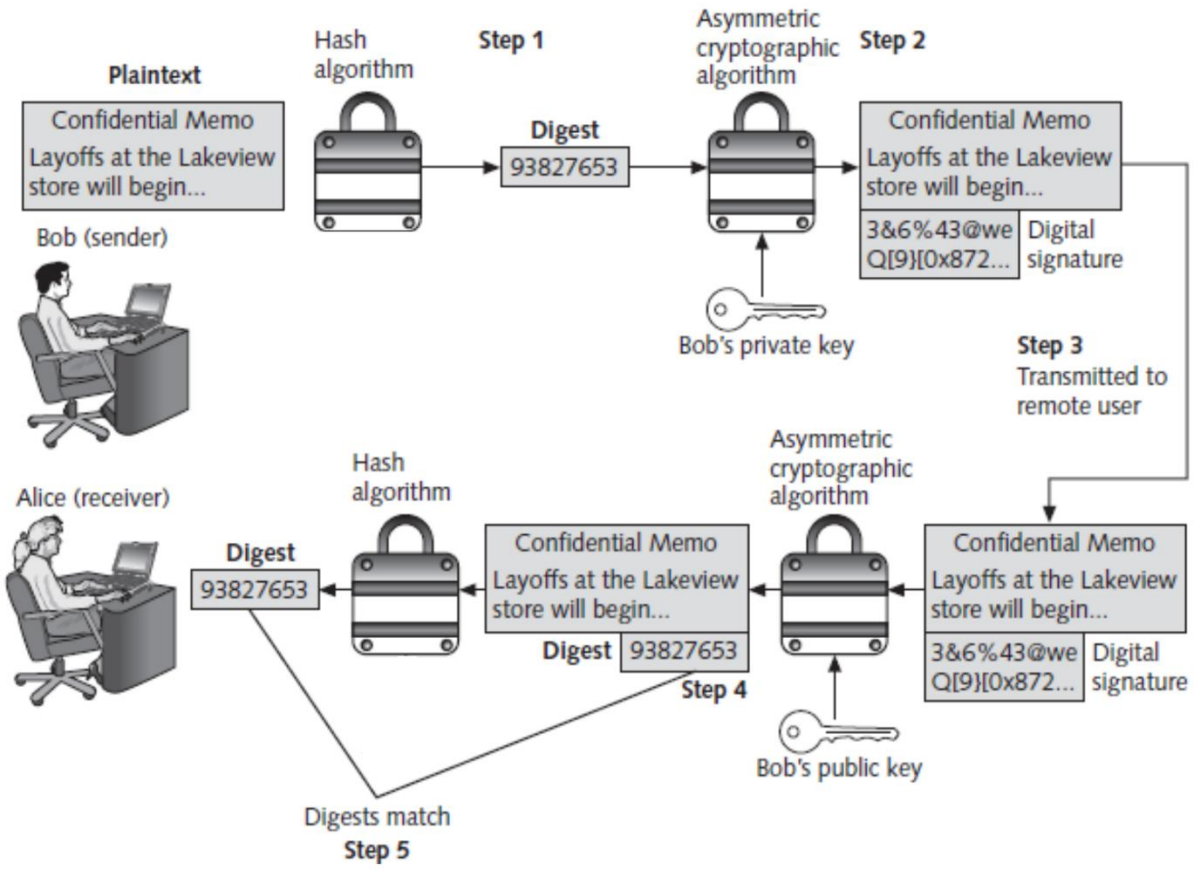

RSA

- Published in 1977 and patented by MIT in 1983
- Most popular asymmetric algorithm
- Uses two large prime numbers

RSA – Creating Public / Private Keys

1. choose large prime numbers *p, q.* (e.g., 1024 bits each)
2. compute $n = pq$, $z = (p-1)(q-1)$
3. choose e (with $e<n$) that has no common factors with z (e, z are "relatively prime")
4. choose d such that $ed-1$ is exactly divisible by z
5. *public* key is (n,e). *private* key is (n,d)

RSA – Encryption / Decryption

- given (n,e) and (n,d) as computed above
- to encrypt message m ($<n$), compute

$$c = m^e \bmod n$$

- to decrypt received bit pattern, c, compute

$$m = c^d \bmod n$$

RSA Example

Bob chooses $p=5$, $q=7$. Then $n=35$, $z=24$.

$e=5$ (so e, z relatively prime).

$d=29$ (so $ed-1$ exactly divisible by z).

encrypting 8-bit messages.

encrypt:

bit pattern	m	m^e	$c = m^e \bmod n$
0000l000	12	24832	17

decrypt:

c	c^d	$m = c^d \bmod n$
17	48196857210675091509141182522307169 7	12

Asymmetric Encryption Algorithms

Asymmetric Encryption Algorithm	Key Length (in Bits)	Description
DH	512, 1024, 2048, 3072, 4096	The Diffie-Hellman algorithm is a public key algorithm invented in 1976 by Whitfield Diffie and Martin Hellman. It allows two parties to agree on a key that they can use to encrypt messages they want to send to each other. The security of this algorithm depends on the assumption that it is easy to raise a number to a certain power, but difficult to compute which power was used given the number and the outcome.
Digital Signature Standard (DSS) and Digital Signature Algorithm (DSA)	512 - 1024	DSS was created by NIST and specifies DSA as the algorithm for digital signatures. DSA is a public key algorithm based on the ElGamal signature scheme. Signature creation speed is similar with RSA, but is 10 to 40 times as slow for verification.
RSA encryption algorithms	512 to 2048	Developed by Ron Rivest, Adi Shamir, and Leonard Adleman at MIT in 1977. It is an algorithm for public-key cryptography that is based on the current difficulty of factoring very large numbers. It is the first algorithm known to be suitable for signing as well as encryption, and one of the first great advances in public key cryptography. Widely used in electronic commerce protocols, and is believed to be secure given sufficiently

Symmetric and Asymmetric Encryption

Symmetric Encryption Algorithm	Asymmetric Encryption Algorithm
Best known as shared-secret key algorithms.	Best known as public key algorithms.
The usual key length is 80 to 256 bits.	The usual key length is 512 to 4,096 bits.
A sender and receiver must share a secret key.	A sender and receiver do not share a secret key.
Algorithms are usually quite fast (wire speed) because they are based on simple mathematical operations.	Algorithms are relatively slow because they are based on difficult computational algorithms.
Examples include DES, 3DES, AES, IDEA, RC2/4/5/6, and Blowfish.	Examples include RSA, ElGamal, elliptic curves, and DH.

Key Exchange

- Problem of sending and receiving keys
  - Out-of-band - Make the exchange outside of normal communication channels
  - In-band - Key exchange that occurs within normal communications channel

Diffie-Hellman (DH) Algorithm

- Allows two computers to generate identical shared secret on both systems, without having communicated before
- Invented by Whitfield Diffie and Martin Hellman in 1976
- Basis of most modern key exchange methods; one of the most common protocols used in networking today
- The key can be used by an encryption algorithm to encrypt traffic between the two systems

Diffie-Hellman (DH) Algorithm

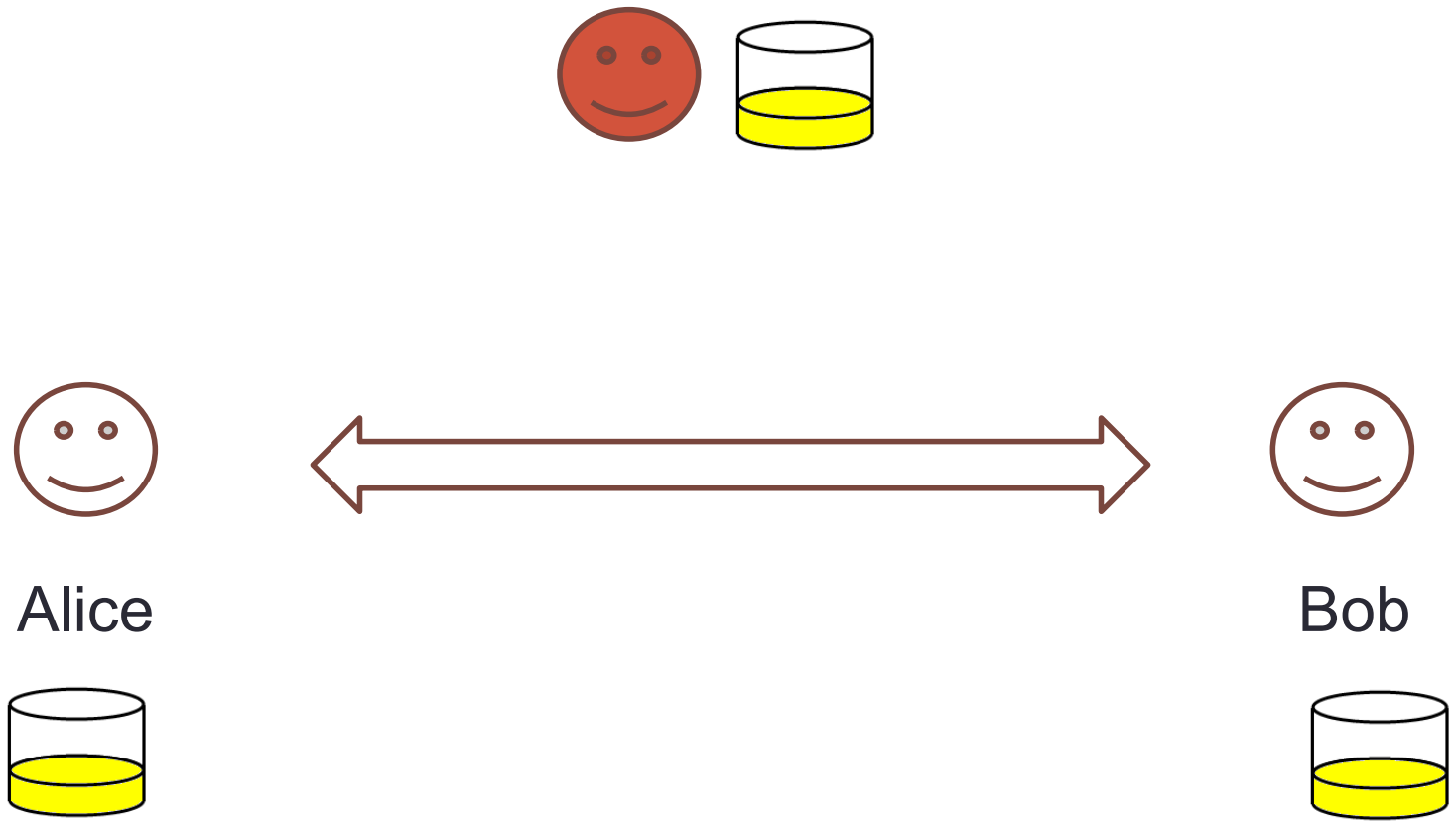

Diffie-Hellman (DH) Algorithm

Diffie-Hellman (DH) Algorithm

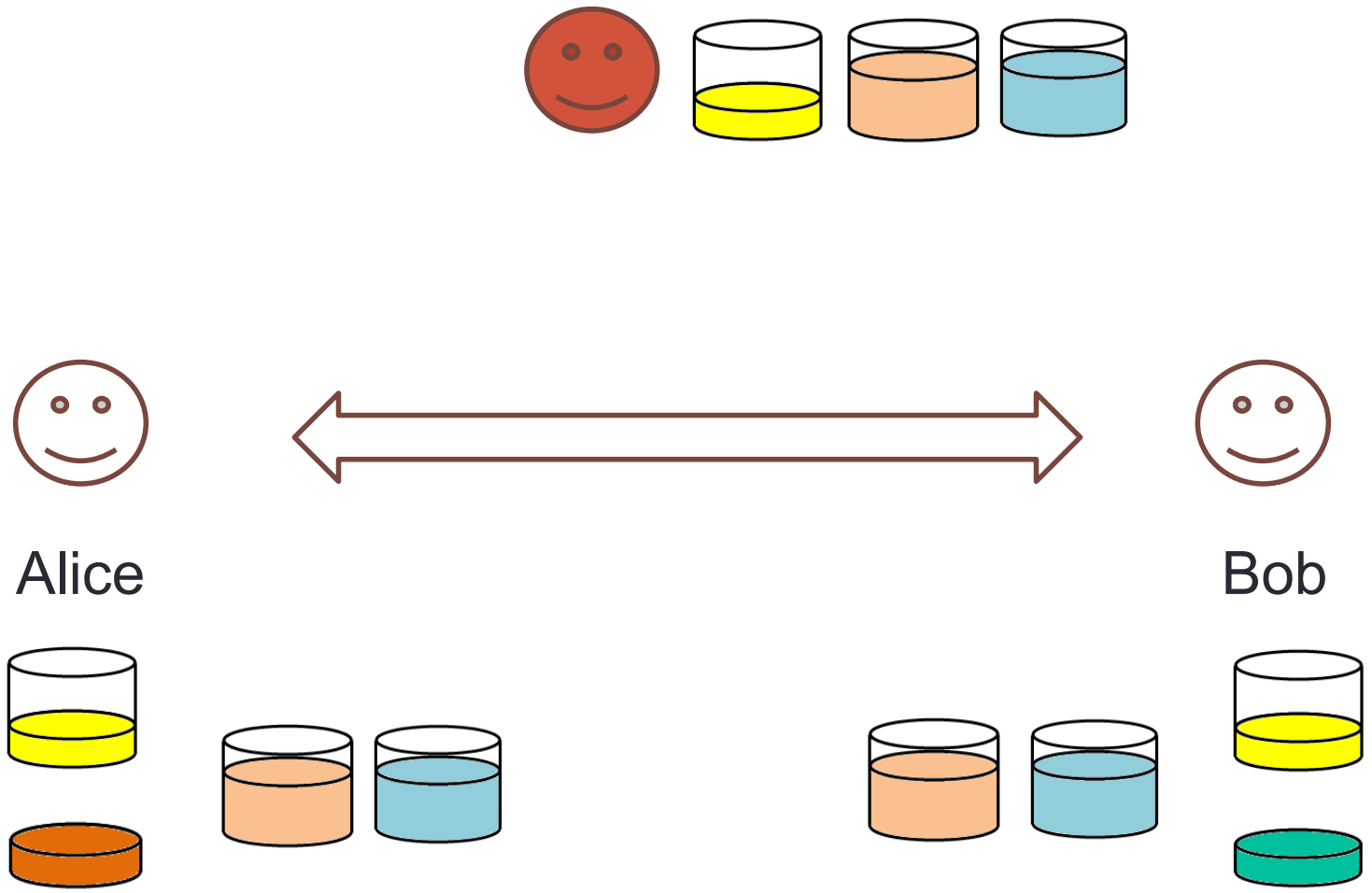

Diffie-Hellman (DH) Algorithm

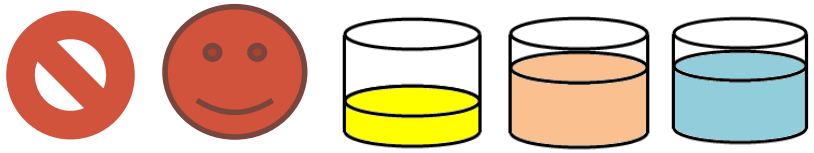

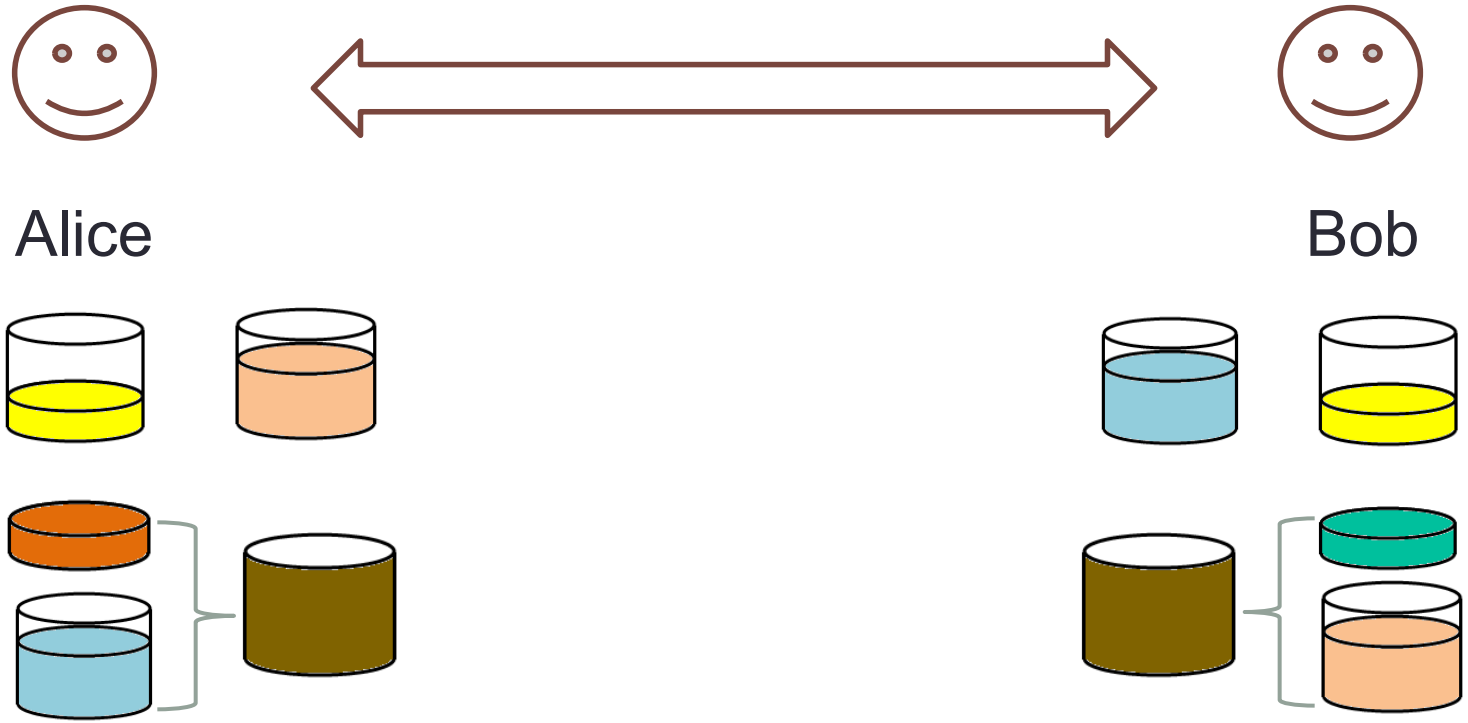

Diffie-Hellman (DH) Algorithm

- Alice and Bob agree to use a base (5) and a prime modulo (23)
- Alice secret (6), Bob secret (15)

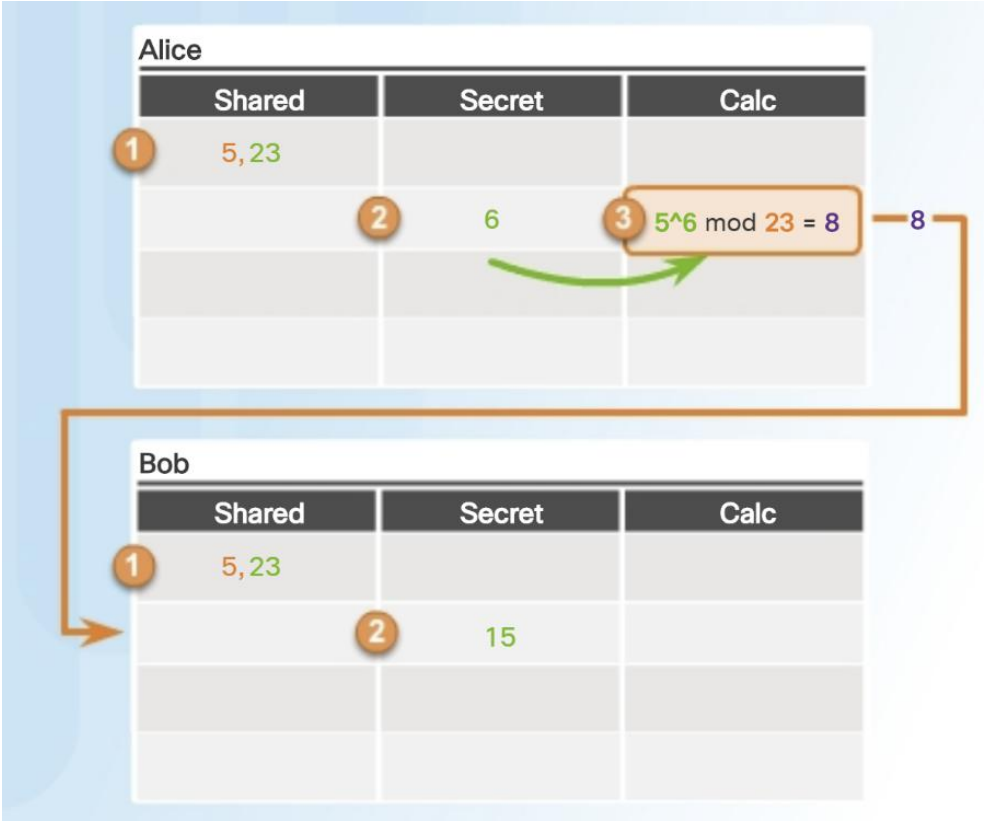

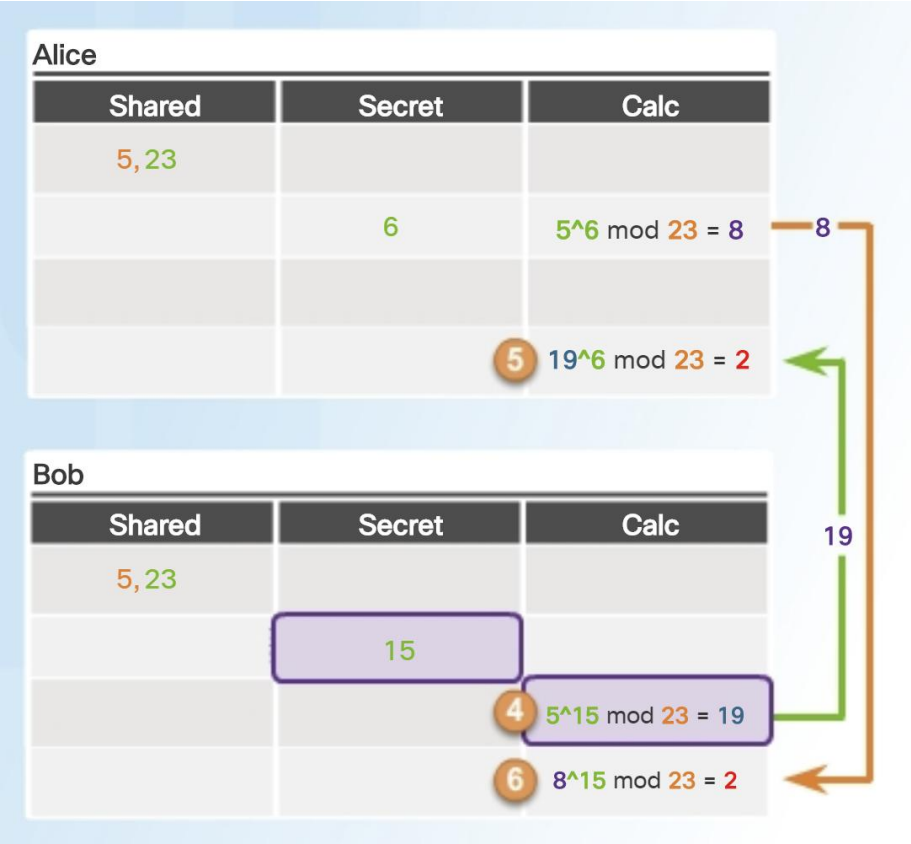

Encryption Through Software

- File and file system cryptography - Encryption software can be applied to one or many files
- Protecting groups of files based on operating system's file system
- Pretty Good Privacy (PGP):
  - Widely used asymmetric system (also support symmetric)
  - Used for files and e-mails
- GNU Privacy Guard (GPG)
  - Runs on Windows, UNIX, and Linux

Windows Encrypting File System (EFS)

- Cryptography system for Windows
- Uses NTFS file system
- Tightly integrated with the file system
- Encryption and decryption transparent to the user
- Users can set encryption attribute for a file in the Advanced Attributes dialog box

Whole Disk Encryption

- Protects all data on a hard drive
- Example: BitLocker drive encryption software

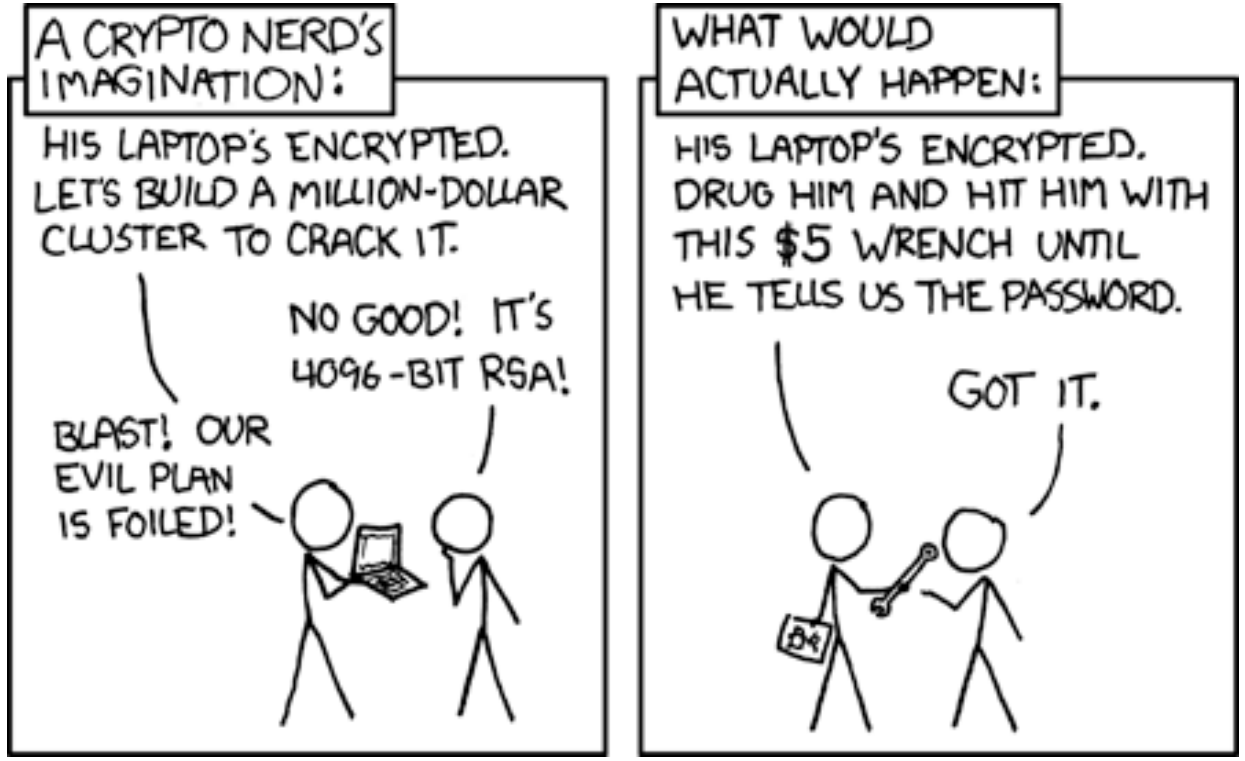

Hardware Encryption

- Software encryption can be subject to attacks to exploit its vulnerabilities
- Cryptography can be embedded in hardware to provide higher degree of security
- Can be applied to USB devices and standard hard drives

Hardware Encryption: USB Drives

- Encrypted hardware-based flash drives
- Typical characteristics
  - Will not connect to a computer until correct password is provided
  - Data copied to the drive is automatically encrypted
  - Tamper-resistant external cases
  - Administrators can remotely control and track activity on the devices
  - Stolen drives can be remotely disabled

Hardware Encryption: HDD

- Hard disk drive encryption
  - Self-encrypting hard disk drives protect all files stored on them
  - Drive and host device perform authentication process during initial power up
  - If authentication fails, drive can be configured to deny access or even delete encryption keys so all data is permanently unreadable